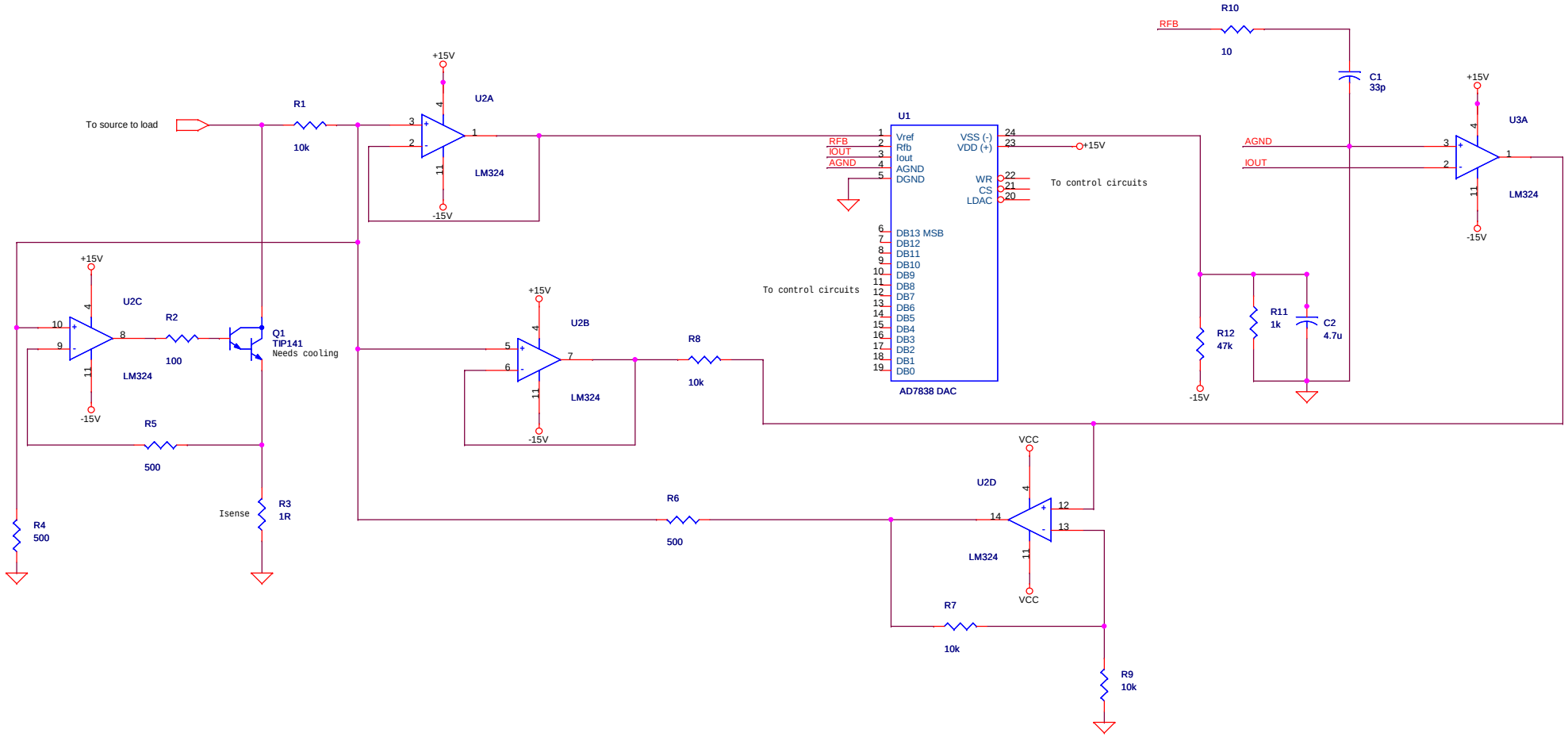


| | |
|---|---|
| Title | Last. By David |
| Size A3 | Document Number - |
| Rev | 0 |
| Date: | Wednesday, December 05, 2007 |
| Sheet | 1 of 1 |